RoHS Compliant	Rev.	Decription/Eco	Date	By

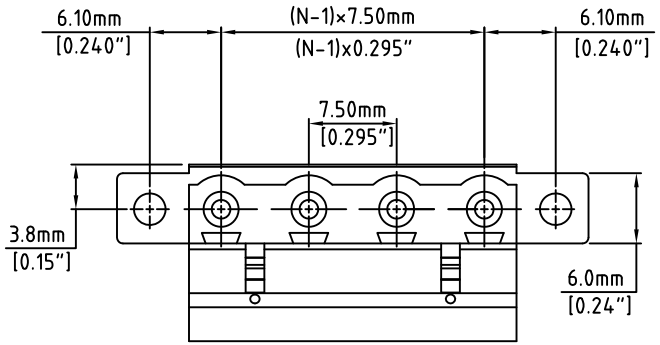

N=Number of Positions

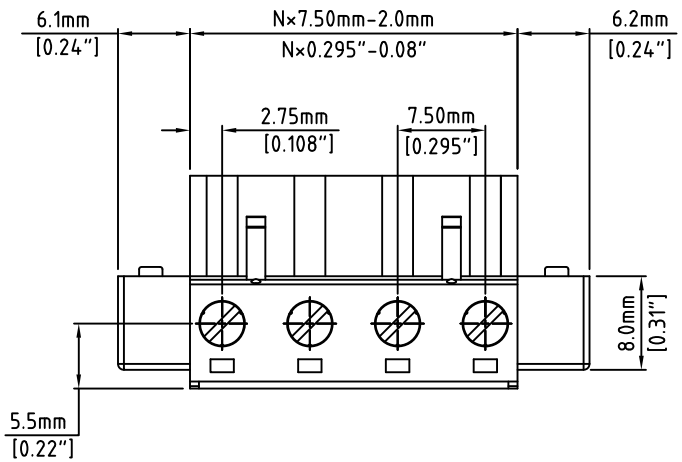

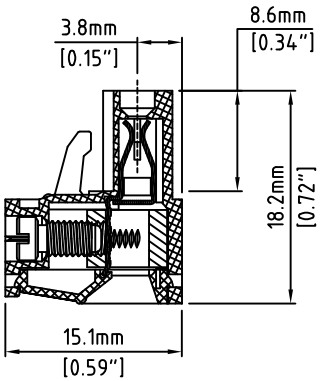

Material:	
Contact Block:	Brass, Ni Plated
Wire Guard:	PhBz, Tin Plated
Terminal Screw:	M3, Steel, Zinc Plated, "-" slotted
Flange Screw:	M2.5, Steel, Zinc Plated, "-" slotted
Insulating Body:	Polyamide, UL94V-0, Green
Electrical	
Voltage Rating:	300 VAC
Current rating:	20 AMPS
Withstand Voltage:	1500 VAC, Test time 60 sec
Wire Range:	12-24 AWG
Mechanical	
Torque:	5.0 lbs-in. Max
Operating Temperature:	-40°C to +105°C -40°F to +221°F
Safety Approval:	C US

Part Number Configuration.

EB1750M-XX-500

Number of Positions — Color Option 5-Green

(Other Color Options Available
Please consult Factory)

Max Number of Positions = 16

UNLESS OTHERWISE SPECIFIED BREAK ALL SHARP EDGES AND DEBURR ALL HOLES

TITLE: 7.50mm SPACING, PLUGGABLE BLOCK MOUNTABLE

LIMITS: UNLESS OTHERWISED SPECIFIED
HUND.±.02 FRACT.±1/64
THOU.±.005 ANGLE±1°

SCALE

THIS IS A CONFIDENTIAL DRAWING AND MUSTBE TREATED AS SUCH. NO DISTRIBUTION IS ALLOWED WITHOUT WRITTEN APPROVAL BY EBY ELECTRO INC.

EBY Electro Inc.
PLAINVIEW, NY 11803

IMPORTANT DISCLAIMER: All information provided on this print is for reference. Always perform your own tests and acquire samples and further information to determine product suitability. While we make effort to provide accurate information, we cannot be responsible for errors either of omission or typographical. EBY Electro, Inc. assumes no responsibility for the use or suitability of any product. All products and specifications are subject to change without prior written notice.

METRIC LIMITS
ONE PLACE ±0.3
TWO PLACES ±0.10
ANGLE ± 1°

DRAWN MWP DATE 02/16/06
CHECKED ____ DATE ____
APPROVED ____ DATE ____

SIZE A

DRAWING NUMBER: EB1750M-XX-500

REV.